PART PHOTOS

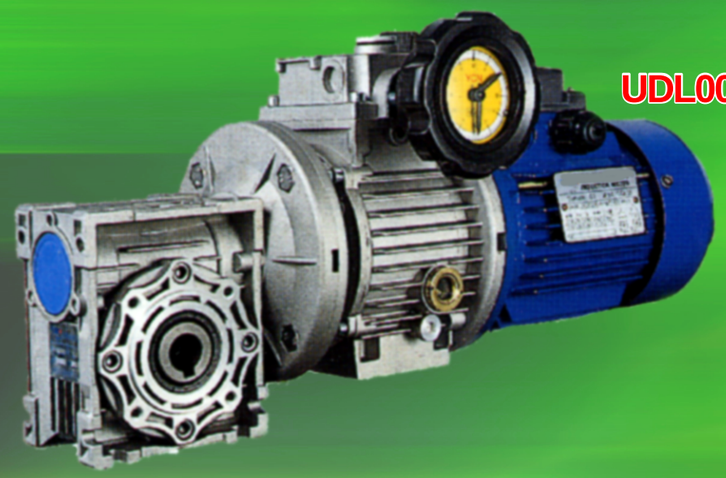

UDL005 + NMRW 050 (+63B5)

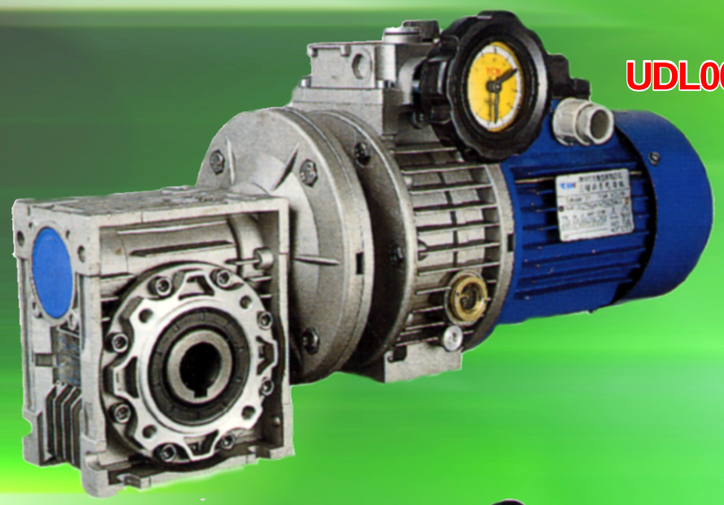

UDL005 + NMRW 063 (+71B5)

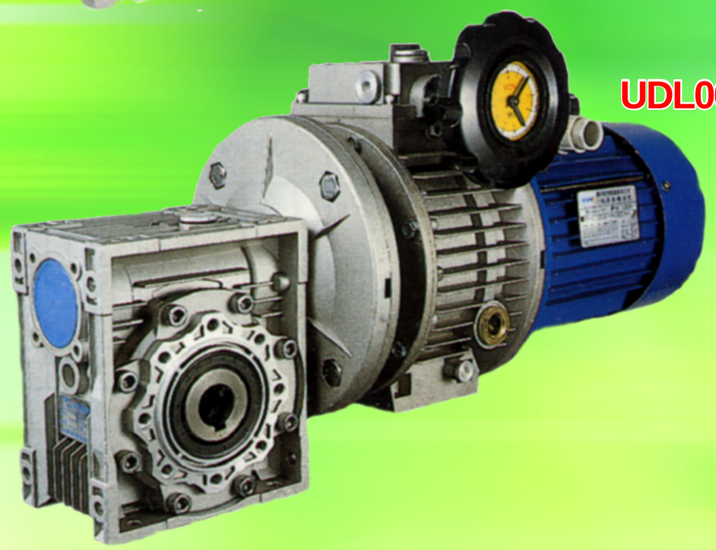

UDL005 + NMRW 075 (+80B5)

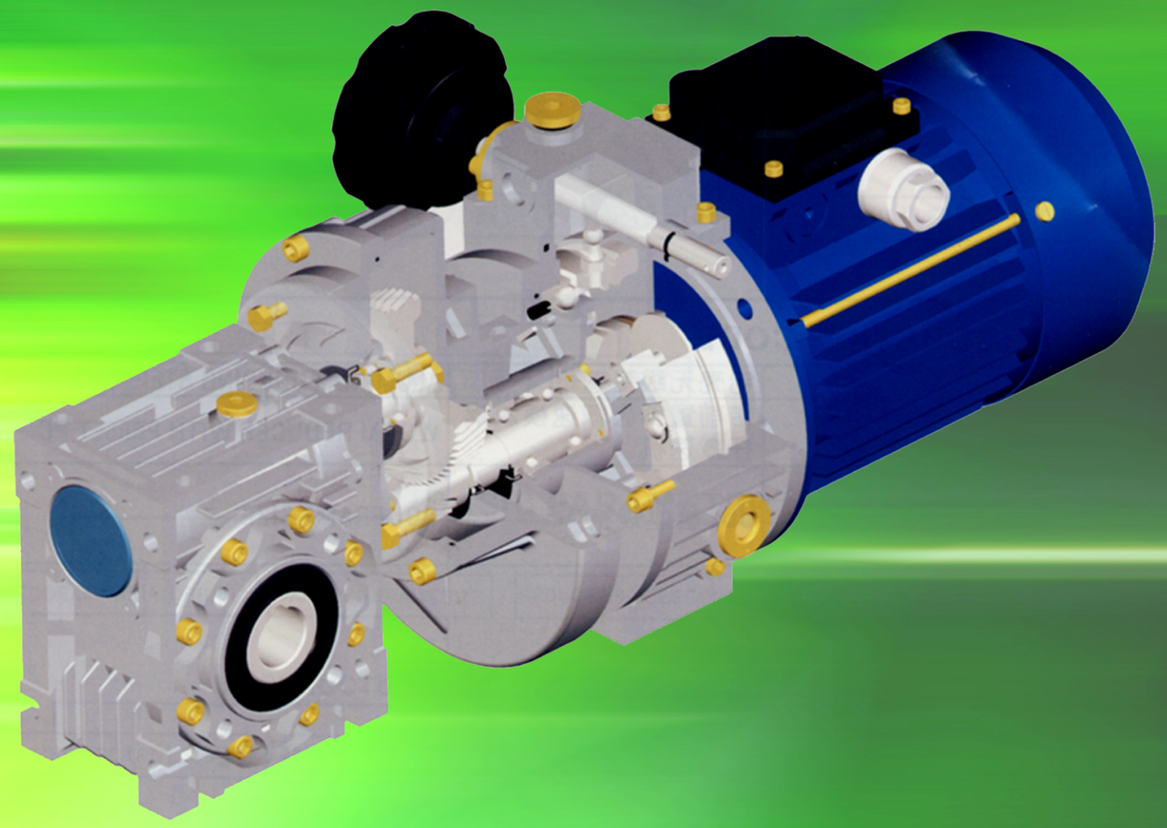

UDL + PCRW + NMRW
COMBINATION OF UDL STEPLESS
VARIATOR AND PCRW WORM REDUCER

MOTORIDUTTORI
E RIDUTTORI A VITE SENZA FINE

FERRONI TRANSMISSION s.r.l.

Manufactures - Gearboxes

Via Prato Bovino, 86 Cogruzzo 42024 CASTELNOVO SOTTO (RE) ITALY

Tel. 0522/685339
Fax 0522/685298

http://www.ferronitransmission.it
e-mail: info@ferronitransmission.it

DRW030/063

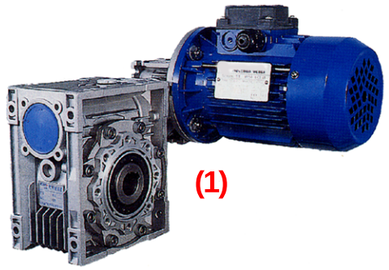

(1)

DRW040/075

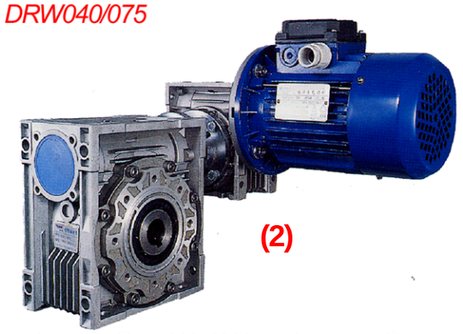

(2)

NMRW/DRW DOUBLE NMRW REDUCERS COMBINATION

NMRW ... -E

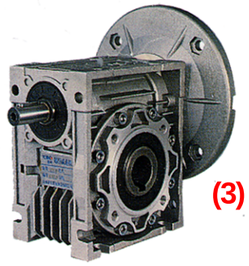

(3)

NRW ... -E

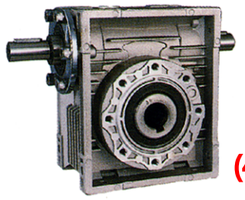

(4)

EXTENSION WORM SHAFT (E)

NMRW ... -F1

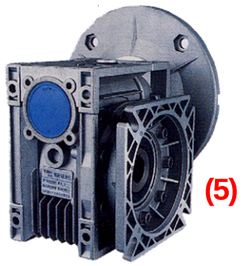

(5)

NRW ... -F1

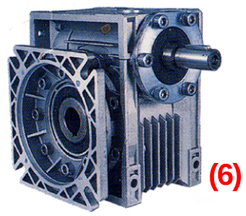

(6)

STRUCTURE CONFIGURATIO OUT FLANGE (F)

NMRW063

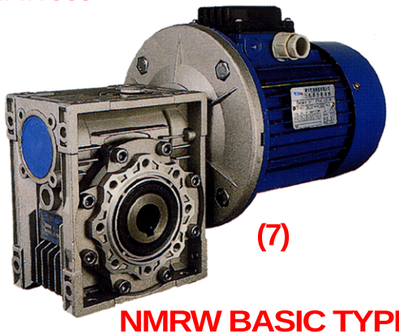

(7)

NMRW BASIC TYPE

NRW063

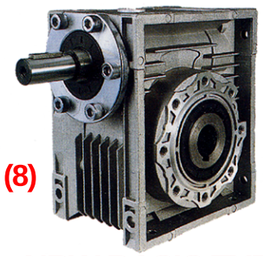

(8)

NRW BASIC TYPE

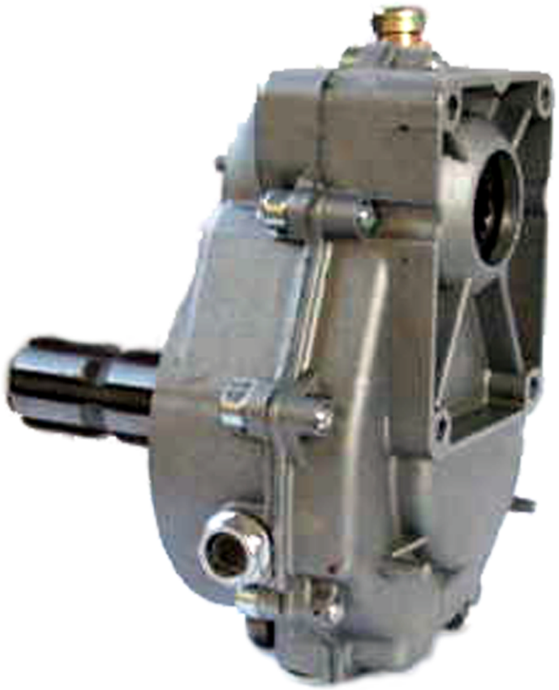

TIPE M.G.R. - 2

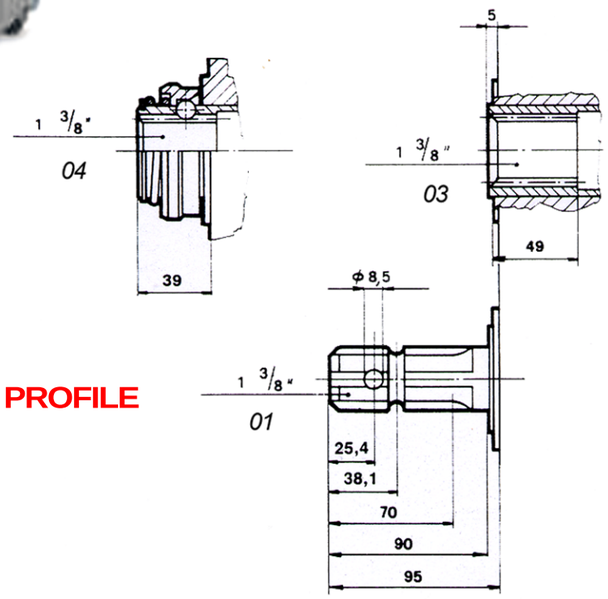

THE DIMENSIONS OF THE PROFILE

M1 daNm	M2 daNm	N. 1 GIRI/1' TOURS/1' R.P.M. U/min	N. 2 GIRI/1' TOURS/1' R.P.M. U/min	I N.1 / N.2	H.P.	G Kg
17,8	11,9	540	810	1,5	11	5,5
15,2	7,6	540	1080	2	11	5,5
16,5	6,6	540	1350	2,5	11	5,5
18	5,5	540	1680	3	11	5,5
18,6	5,8	540	1836	3,5	11	5,5
15,9	4,2	540	2052	3,8	11	5,5

UDL005+NMRW

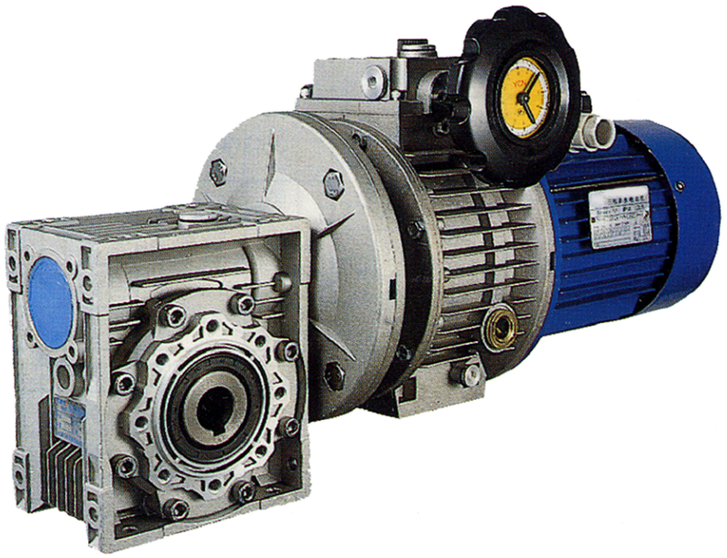

THE DIMENSIONS OF PROFILE FOR B5 FORM

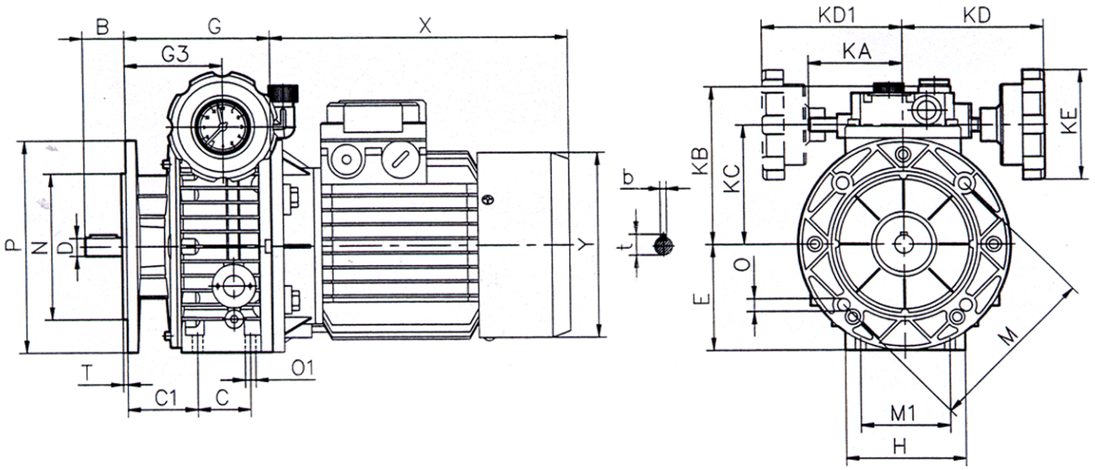

	B	C	C1	D(j6)	E	G	G3	H	M	M1	N	O	O1	P	T	KA	KB	KC	KD	KD1	KE	b	t
UDL002	23	50	46	11	70	112.5	64.5	72	115	60	95	9	M6	140	3.5	71	111	78	110	110	85	4	12.5
UDL005	30	40	53	14	80	110	74	90	130	77	110	9	M8	160	3.5	71	123	90	110	110	85	5	16
UDL010	40	58	60	19	100	139	85.5	98	165	84	130	11	M8	200	3.5	79	140	107	120	120	110	6	21.5
UDT020	50	-	-	24	126	188	115	241	165	-	130	11	-	200	3.5	-	144	122	150	-	110	8	27
UDT030S/L	60	-	-	28	150	208	131	270	215	-	180	15	-	250	4	-	188	150	160	-	110	8	31
UDT050S/L	70	-	-	38	200	244	131	-	265	-	230	19	-	300	5	-	-	192	194	-	110	10	41

PERFORMANCE

NMRW (n_1= 1400r/min) NMRW PERFOMANCE PARAMETER (n_1=1400r/min)

KW	TYPE	i	n_2(r/min)	M_2(N.M)
0.06KW	NMRW 030	5	280	1.8
	NMRW 030	7.5	186	2.6
	NMRW 030	10	140	3.4
	NMRW 030	15	94	4.8
	NMRW 030	20	70	5.5
	NMRW 030	25	56	7.2
	NMRW 030	30	47	8.2
	NMRW 030	40	35	8.5
	NMRW 030	50	28	11.6
	NMRW 040			12.4
	NMRW 030	60	24	12.8
	NMRW 040			12.6
	NMRW 030	80	18	13.8
	NMRW 040			16.8
	NMRW 040	100	14	19.5
0.09KW	NMRW 030	5	280	2.7
	NMRW 030	7.5	186	4.0
	NMRW 030	10	140	5.1
	NMRW 030	15	94	7.2
	NMRW 030	20	70	8.3
	NMRW 030	25	56	10.7
	NMRW 030	30	47	12.3
	NMRW 030	40	35	12.8
	NMRW 030	50	28	17.4
	NMRW 040			18.6
	NMRW 030	60	24	19.2
	NMRW 040			19.0
	NMRW 040	80	18	25.2
	NMRW 040	100	14	29.3
0.12KW	NMRW 030	5	280	3.6
	NMRW 040			3.5
	NMRW 030	7.5	186	5.3
	NMRW 040			5.3
	NMRW 030	10	140	6.8
	NMRW 040			8.9
	NMRW 030	15	94	9.6
	NMRW 040			9.9
	NMRW 030	20	70	11.0
	NMRW 040			13.0
	NMRW 030	25	56	14.3
	NMRW 040			15.1
	NMRW 030	30	47	16.4
	NMRW 040			16.6
	NMRW 030	40	35	17.0
	NMRW 040			21.9
	NMRW 050			22.7
	NMRW 030	50	28	23.2
	NMRW 040			24.7
	NMRW 050			26.0
	NMRW 040	60	24	25.3
	NMRW 050			26.2
	NMRW 040	80	18	33.6
	NMRW 050			34.7
	NMRW 040	100	14	39.0
	NMRW 050			39.6
0.18KW	NMRW 030	5	280	5.4
	NMRW 040			5.4

KW	TYPE	i	n_2(r/min)	M_2(N.M)
0.18KW	NMRW 030	7.5	186	7.9
	NMRW 040			7.9
	NMRW 030	10	140	10.2
	NMRW 040			10.3
	NMRW 030	15	94	14.4
	NMRW 040			14.8
	NMRW 030	20	70	16.5
	NMRW 040			19.5
	NMRW 030	25	56	21.5
	NMRW 040			22.7
	NMRW 030	30	47	24.6
	NMRW 040			24.9
	NMRW 040	40	35	32.8
	NMRW 050			34.0
	NMRW 040	50	28	37.1
	NMRW 050			39.0
	NMRW 040	60	24	37.9
	NMRW 050			39.2
	NMRW 050	80	18	52.1
	NMRW 050	100	14	59.3
0.25KW	NMRW 040	5	280	7.6
	NMRW 050			7.6
	NMRW 040	7.5	186	11.0
	NMRW 050			11.2
	NMRW 040	10	140	14.3
	NMRW 050			14.5
	NMRW 040	15	94	20.6
	NMRW 050			20.7
	NMRW 040	20	70	27.0
	NMRW 050			27.5
	NMRW 040	25	56	31.5
	NMRW 050			32.8
	NMRW 040	30	47	34.6
	NMRW 050			36.4
	NMRW 040	40	35	45.6
	NMRW 050			47.3
	NMRW 050	50	28	54.1
	NMRW 050	60	24	54.5
	NMRW 050	80	18	72.4
	NMRW 063			76.7
	NMRW 063	100	14	82.8
0.37KW	NMRW 040	5	280	11.2
	NMRW 050			11.2
	NMRW 040	7.5	186	16.3
	NMRW 050			16.6
	NMRW 040	10	140	21.2
	NMRW 050			21.5
	NMRW 040	15	94	30.5
	NMRW 050			30.6
	NMRW 040	20	70	40.0
	NMRW 050			40.7
	NMRW 040	25	56	46.6
	NMRW 050			48.7
	NMRW 040	30	47	51.2
	NMRW 050			53.8
	NMRW 050	40	35	67.0
	NMRW 063			72.3
	NMRW 050	50	28	80.1
	NMRW 063			83.3
	NMRW 050	60	24	80.6

PERFORMANCE

NMRW (n,= 1400r/min) NMRW PERFOMANCE PARAMETER (n.=1400r/min)

KW	TYPE	i	n_2(r/min)	M_2(N. M)
0.37KW	NMRW 063	60	24	86.5
	NMRW 063	80	18	113.5
	NMRW 063	100	14	122.6
0.55KW	NMRW 040	5	280	16.6
	NMRW 050			16.7
	NMRW 040	7.5	186	24.3
	NMRW 050			24.6
	NMRW 040	10	140	31.5
	NMRW 050			32.0
	NMRW 040	15	94	45.3
	NMRW 050			45.5
	NMRW 063			46.7
	NMRW 050	20	70	60.5
	NMRW 063			61.6
	NMRW 050	25	56	72.3
	NMRW 063			73.2
	NMRW 050	30	47	80.0
	NMRW 063			83.3
	NMRW 050	40	35	104.0
	NMRW 063			107.5
	NMRW 075			115.7
	NMRW 063	50	28	123.9
	NMRW 075			144.3
	NMRW 063	60	24	128.6
	NMRW 075			156.5
	NMRW 075	80	18	215.8
	NMRW 075	100	14	235.0
0.75KW	NMRW 050	5	280	22.7
	NMRW 050	7.5	186	33.6
	NMRW 063			33.8
	NMRW 050	10	140	43.6
	NMRW 063			44.5
	NMRW 050	15	94	62.0
	NMRW 063			63.7
	NMRW 050	20	70	82.4
	NMRW 063			84.0
	NMRW 063	25	56	99.8
	NMRW 063	30	47	113.6
	NMRW 075			124.4
	NMRW 063	40	35	146.6
	NMRW 075			157.8
	NMRW 075	50	28	196.8
	NMRW 090			186.1
	NMRW 075	60	24	213.4
	NMRW 090			211.9
	NMRW 090	80	18	261.1
	NMRW 090	100	14	292.7
1.1KW	NMRW 063	7.5	186	49.6
	NMRW 075			51.4
	NMRW 063	10	140	65.3
	NMRW 075			67.8
	NMRW 063	15	94	93.5
	NMRW 075			98.6
	NMRW 063	20	70	123.2
	NMRW 075			127.7
	NMRW 063	25	56	146.4
	NMRW 075			159.2
	NMRW 063	30	47	166.7
	NMRW 075			182.5
	NMRW 075	40	35	231.4

KW	TYPE	i	n_2(r/min)	M_2(N. M)
1.1KW	NMRW090	40	35	229.7
	NMRW090	50	28	272.9
	NMRW090	60	24	310.8
	NMRW110			319.1
	NMRW110	80	18	403.8
	NMRW110	100	14	471.2
1.5KW	NMRW063	7.5	186	67.6
	NMRW075			70.1
	NMRW063	10	140	89.1
	NMRW075			92.5
	NMRW063	15	94	127.5
	NMRW075			134.5
	NMRW063	20	70	167.9
	NMRW075			174.1
	NMRW075	25	56	217.1
	NMRW090			211.0
	NMRW075	30	47	248.9
	NMRW090			247.1
	NMRW090	40	35	313.3
	NMRW090	50	28	372.1
	NMRW110			392.9
	NMRW090	60	24	423.8
	NMRW110			435.1
	NMRW110	80	18	550.7
	NMRW130			534.0
	NMRW130	100	14	672.2
2.2KW	NMRW075	7.5	186	102.8
	NMRW090			101.9
	NMRW110			101.8
	NMRW075	10	140	135.7
	NMRW090			134.8
	NMRW110			133.7
	NMRW075	15	94	197.3
	NMRW090			196.7
	NMRW110			192.7
	NMRW090	20	70	254.9
	NMRW110			254.5
	NMRW090	25	56	309.5
	NMRW110			319.2
	NMRW090	30	47	362.4
	NMRW110			354.5
	NMRW110	40	35	465.8
	NMRW110	50	28	576.2
	NMRW130			568.7
	NMRW110	60	24	638.1
	NMRW130			655.6
	NMRW130	80	18	783.1
	NMRW130	100	14	985.9
3.0KW	NMRW075	7.5	186	140.1
	NMRW090			139.0
	NMRW110			138.8
	NMRW075	10	140	185.0
	NMRW090			183.8
	NMRW110			182.3
	NMRW075	15	94	269.0
	NMRW090			268.2
	NMRW110			262.7
	NMRW090	20	70	347.7
	NMRW110			347.0
	NMRW090	25	56	422.0

DIMENSIONS

PCRW DIMENSIONS

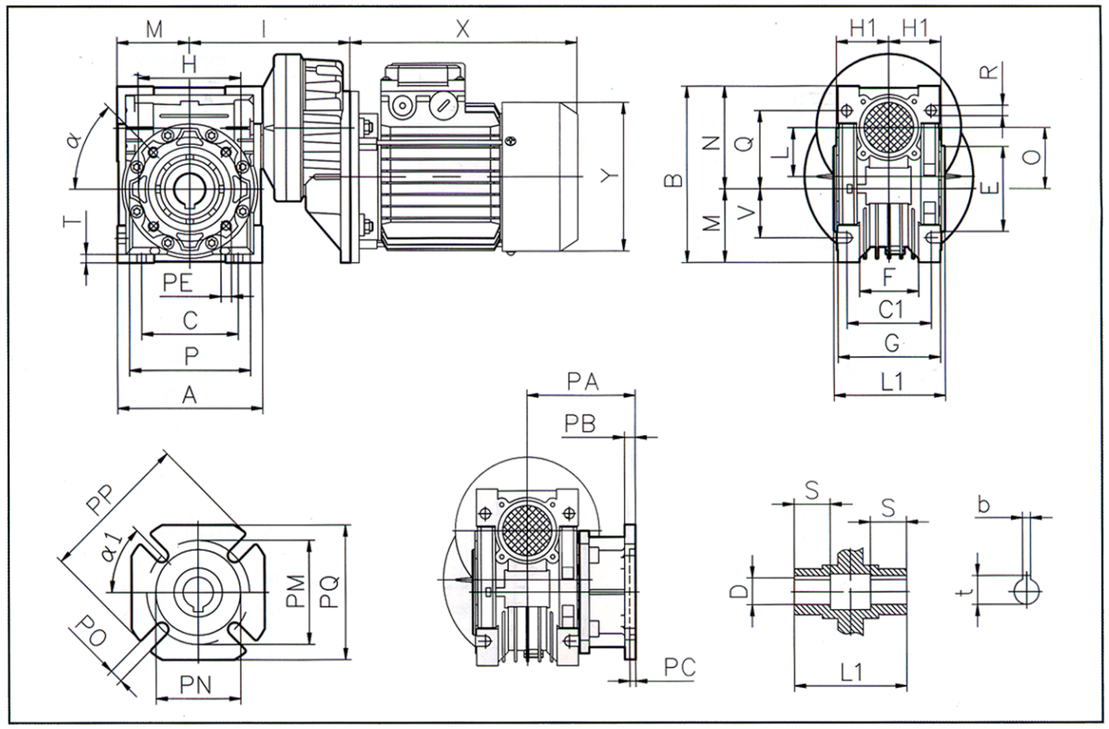

PCRW	A	B	C	C1	D(H7)	E(h8)	F	G	H	H1	I	L	L1	M	N	O	P	Q	R
063/040	100	121.5	70	60	18(19)	60	43	71	75	36.5	123	40	78	50	71.5	40	87	55	6.5
063/050	120	144	80	70	25(24)	70	49	85	85	43.5	133	40	92	60	84	50	100	64	8.5
071/050	120	144	80	70	25(24)	70	49	85	85	43.5	143	50	92	60	84	50	100	64	8.5
063/063	144	174	100	85	25(28)	80	67	103	95	53	148	40	112	72	102	63	110	80	8.5
071/063	144	174	100	85	25(28)	80	67	103	95	53	158	50	112	72	102	63	110	80	8.5
071/075	172	205	120	90	28(35)	95	72	112	115	57	176	50	120	86	119	75	140	93	11
080/075	172	205	120	90	28(35)	95	72	112	115	57	186	63	120	86	119	75	140	93	11
071/090	206	238	140	100	35(38)	110	74	130	130	67	193	50	140	103	135	90	160	102	13
080/090	206	238	140	100	35(38)	110	74	130	130	67	203	63	140	103	135	90	160	102	13
080(090)/110	252.5	295	170	115	42	130	–	144	165	74	233	63	155	127.5	167.5	110	200	125	14
080(090)/130	292.5	335	200	120	45	180	–	155	215	81	253	63	170	147.5	187.5	130	250	140	16

PCRW	S	T	V	PA	PB	PC	PE	PM	PN	PO	PP	PQ	b	t	α	α1	Kg
063/040	26	6.5	35	67	7	4	M6x8(n=4)	75	60	9(n=4)	110	95	6(6)	20.8(21.8)	45°	45°	3.9
063/050	30	7	40	90	9	5	M8x10(n=4)	85	70	11(n=4)	125	110	8(8)	28.3(27.3)	45°	45°	5.2
071/050	30	7	40	90	9	5	M8x10(n=4)	85	70	11(n=4)	125	110	8(8)	28.3(27.3)	45°	45°	5.8
063/063	36	8	50	82	10	6	M8x14(n=8)	150	115	11(n=4)	180	142	8(8)	28.3(31.3)	45°	45°	7.9
071/063	36	8	50	82	10	6	M8x14(n=8)	150	115	11(n=4)	180	142	8(8)	28.3(31.3)	45°	45°	8.5
071/075	40	10	60	111	13	6	M8x14(n=8)	165	130	14(n=4)	200	170	8(10)	31.3(38.3)	45°	45°	11.3
080/075	40	10	60	111	13	6	M8x14(n=8)	165	130	14(n=4)	200	170	8(10)	31.3(38.3)	45°	45°	13.1
071/090	45	11	70	111	13	6	M10x18(n=8)	175	152	14(n=4)	210	200	10(10)	38.3(41.3)	45°	45°	15.3
080/090	45	11	70	111	13	6	M10x18(n=8)	175	152	14(n=4)	210	200	10(10)	38.3(41.3)	45°	45°	17.2
080(090)/110	50	14	85	131	15	6	M10x18(n=8)	230	170	14(n=8)	280	260	12	45.3	45°	45°	39
080(090)/130	60	15	100	140	15	6	M12x21(n=8)	255	180	16(n=8)	320	290	14	48.8	45°	22.5°	52.2